D-3027

DO NOT SCALE DRAWING REPORT ALL ERRORS TO ENG DEPT
TOLERANCES TWO DECIMALS ± .030
THREE DECIMALS ± .010

REVISIONS				
ZONE	NO.	DESCRIPTION	DATE	BY
	1	-		

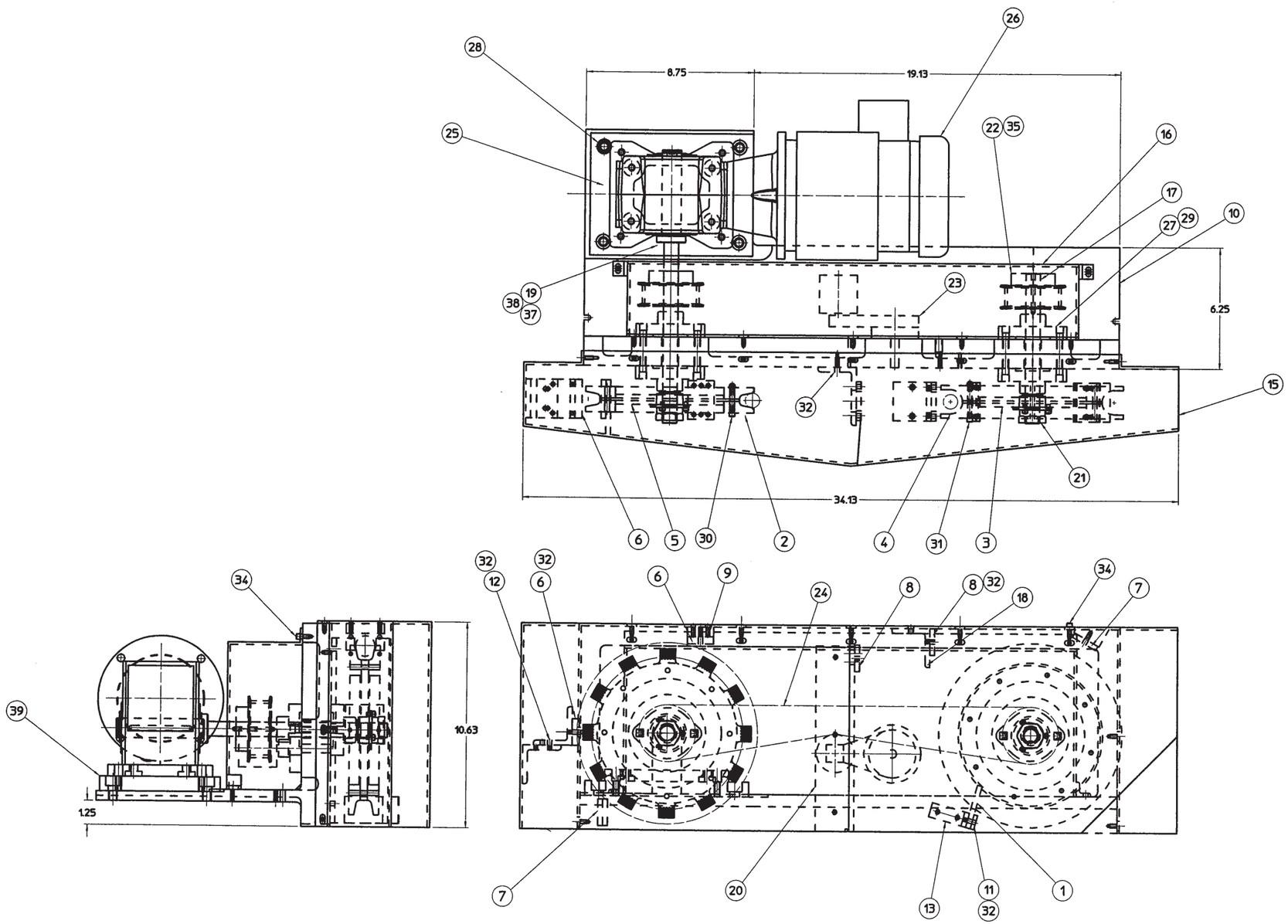

DRAWING No.	ITEM	AMT	STOCK SIZE OR DESCRIPTION	MATERIAL
	39	1	REDUCER SPACER	6061 ALUM
	38	1	RETAINING RING	PURCH
	37	1	3/8 X 3/8 X 4.00 LG	KEY STOCK
	35	2	3/16 X 3/16 X 2.00 LG	KEY STOCK
	34	16	#10-24 X .50 SOC HD CAP SCREW WITH F/W , L/W	SST
	33	2	#10-24 X 1.00 SOC HD CAP SCREW WITH F/W , L/W & HEX NUT	SST
	32	10	#10-24 X .75 SOC HD CAP SCREW WITH F/L & L/W	SST
	31	8	#10-24 X 2.25 SOC HD CAP SCREW WITH F/W , L/W & HEX NUT	SST
	30	8	#10-24 X 1.50 SOC HD CAP SCREW WITH F/W , L/W & HEX NUT	SST
	29	8	5/16-18 X 1.25 SOC HD CAP SCREW WITH L/W	SST
	28	4	7/16-14 X 1.25 SOC HD CAP SCREW WITH L/W	SST
	27	4	FLANGE BEARING	PURCH
	26	1	1/2 HP ELECTRIC MOTOR 1800 RPM FRAME 56C 115/230-60HZ 1PH TEFC	PURCH
	25	1	REDUCER	PURCH
	24	1	BELT	PURCH
	23	1	TENSIONER PURCH	
	22	2	BELT SPROCKET	PURCH
	21	2	TAPPERED KEYLESS BUSHING	PURCH
D2020	20	1	BRACKET	6061 ALUM
B2026	19	1	REDUCER SHAFT	TG & P
D2018	18	1	BRACKET	6061 ALUM
D2017	17	1	SHAFT	CFS 1018
D2016	16	1	GUARD REAR SAFTY GUARD	FAB ALUM
D2015	15	1	GUARD FRONT SAFTY	FAB ALUM
B2014	13	1	BRACKET	6061 ALUM
B2012	12	1	BRACKET	6061 ALUM
A2011	11	1	RETAINER	6061 ALUM
D2010	10	1	BASE	CAST ALUM
A2021	9	1	SPACER	6061 ALUM
A2009	8	2	SCRAPER	DURON
A2006/AC	7	2	PRESSURE PAD BLOCK	DURON
A2006/AB	6	2	PRESSURE PAD BLOCK	DUREON
D2004	4	2	PULLY WHEEL UNIVERSAL RING	DUREON
D2003	3	2	PULLY WHEEL HUB	6061 ALUM
D2002	2	2	DRIVE WHEEL RING	DUREON
A2001	1	1	PULLY WHEEL SCRAPER	URETHANE

SIGNATURES	MO	DAY	YR
DRAWN KGK	02	03	03
CHECKED NC	02	03	03

TYPE OF FINISH

A.S.A.

MODEL BG34 SKIMALL™ OIL SKIMMER

SKIMTECH

THE SKIMTECH CORPORATION BOARDMAN, OHIO U.S.A.

3/4 DIA. SKIMALL ASS'Y SPARE PARTS

MATERIAL FAB STEEL

SIZE D 3027

SCALE 0.38 SHEET OF